Technical file

842.400|02

Built-in box with monoblock filter
270 mm
Mineral Black

EAN 5414425195046

Dimensions (mm)

Dimensions (HxWxD) (mm)	270 x 500 x 295
Cut-out (HxW)(mm)	255 x 487
Minimum building-in depth (mm)	295
Dimensions inlet (HxW)(mm)	ø150 mm

General

Color grid	Mineral Black
Monoblock filter(s) inclusive	●
Number of monoblock filter(s)	1
Position inlet	Corner top / corner rear / corner side
Mounting in	Wall / ceiling

Accessories

Monoblock filter for recirculation	830.055
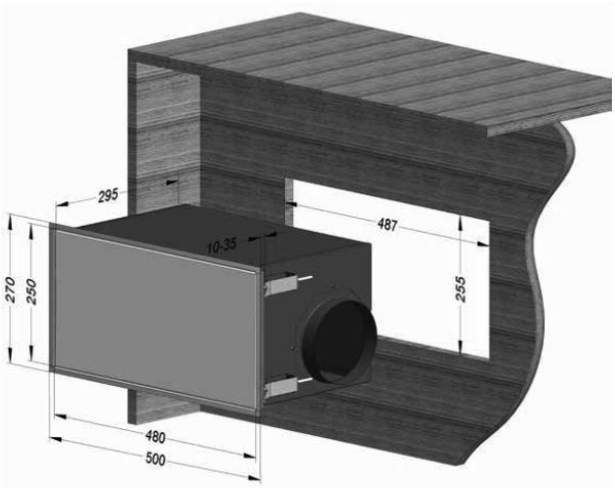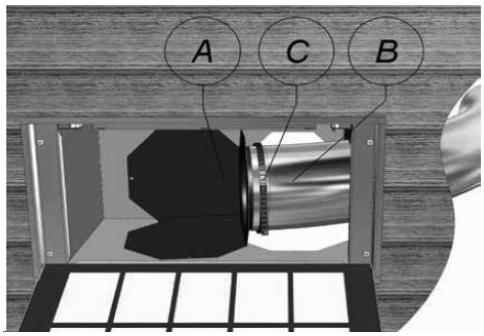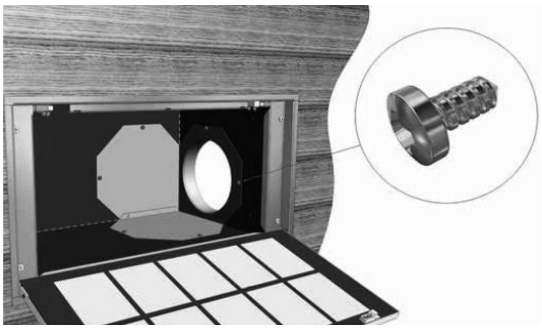
Dimensions